Annex 3.1. Execution electrical schematic for LOT 1

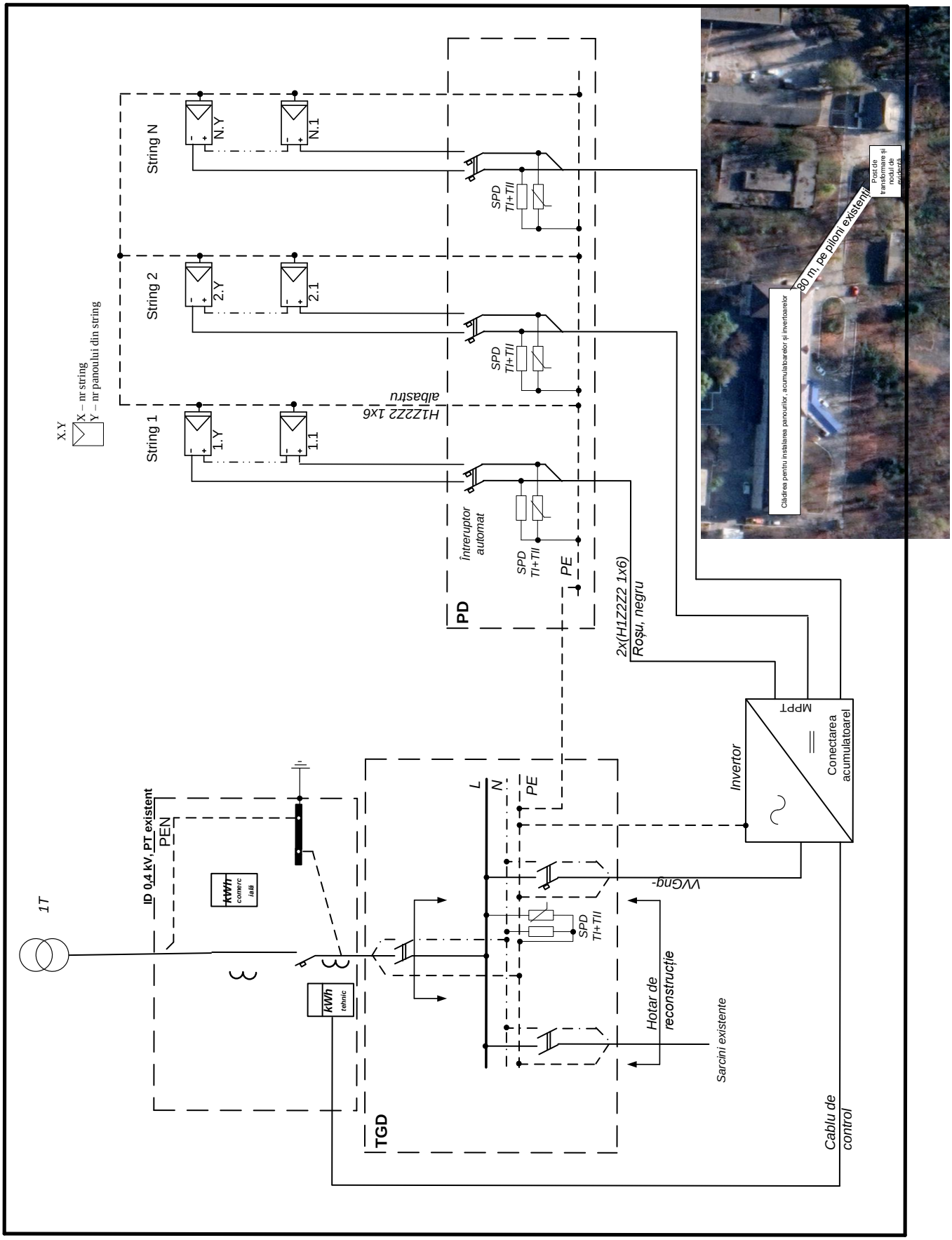

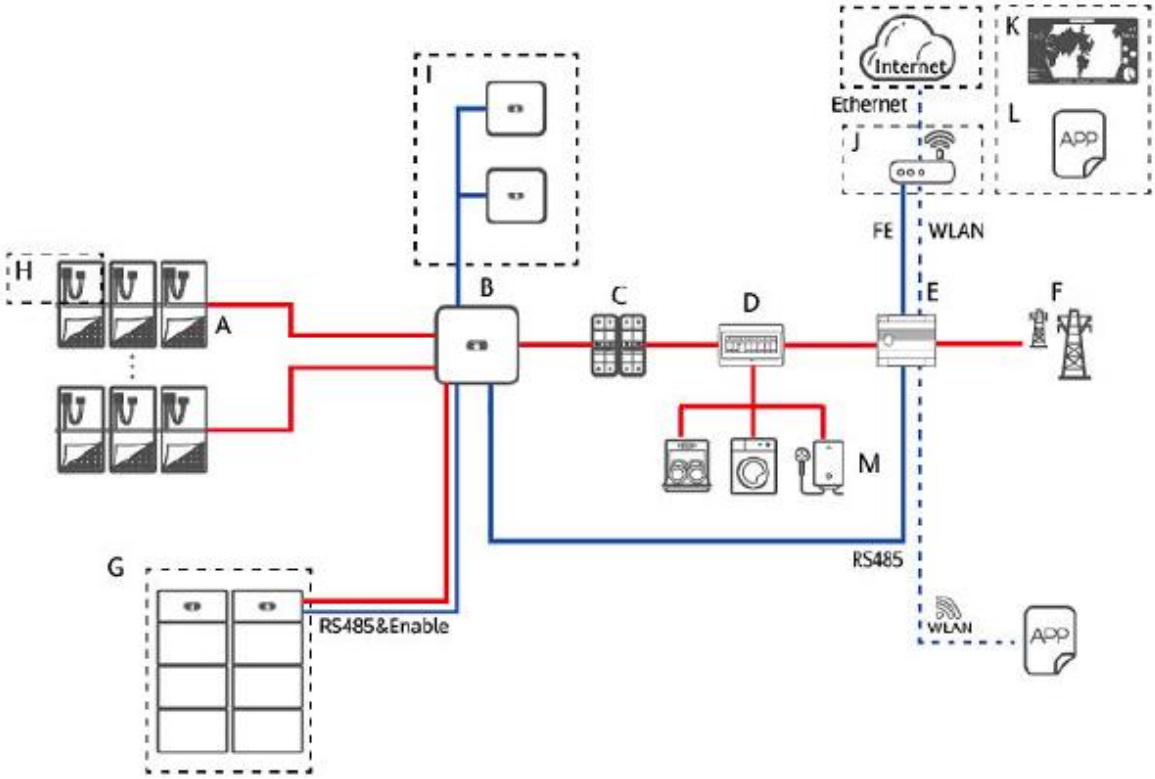
Internet
K
Ethernet
L
APP
J
I
FE
WLAN
H
B
C
D
E
F
A
M
RS485
G
RS485&Enable
WLAN
APP